linear dimension(Tolerances Standard GB/T 14486-2008)								—	▱	⊥
variable range	to 6	over 6 to 10	over 10 to 30	over 30 to 60	over 60 to 100	over 100 to 160	over 160 to	to 10	over 10 to 100	over 100 to
tolerance	±0.20	±0.30	±0.50	±0.70	±1.00	±1.30	±1.60	0.10	0.30	0.60

REVISION RECORD				
REV.	DESCRIPTION	ECN No.	APPROVED	DATE
A	新发行		CLF	25.05.12

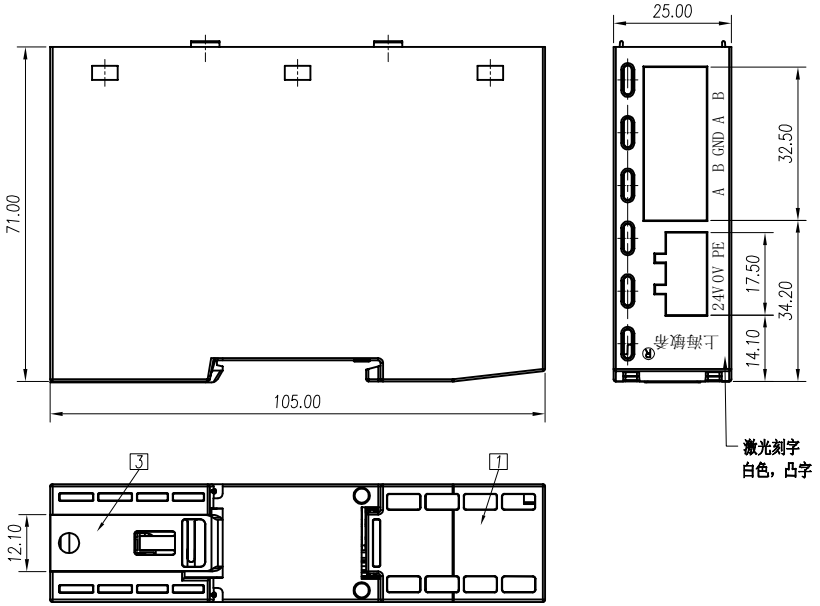

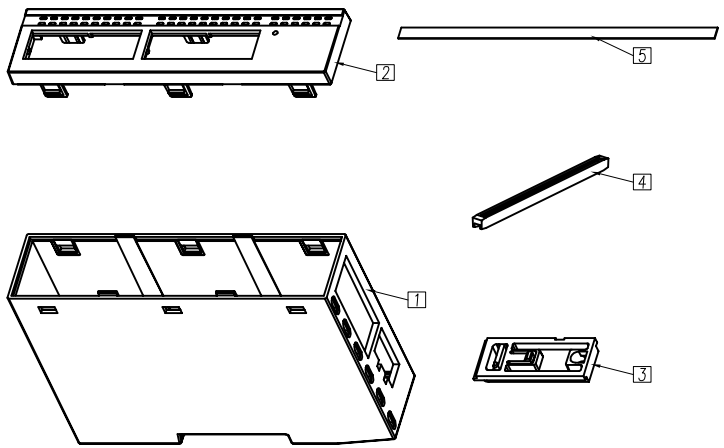

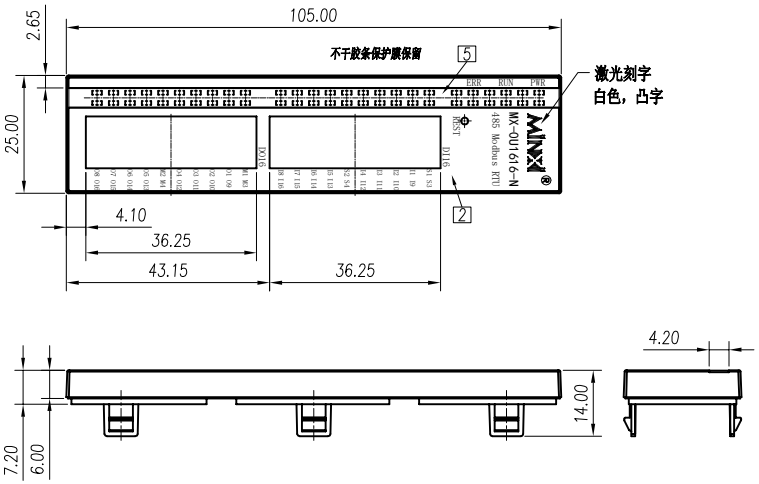

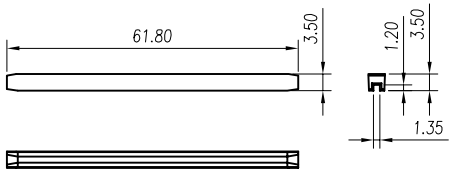

UL/CUL 技术 参数 UL/CUL Technical Data			
等 级 Use Group	B	C	D
额定电压 Rated Voltage [V]	-	-	-
额定电流 Rated Current [A]	-	-	-
接线范围 Wire Range 单/多芯线 Solid/Stranded [AWG]	-		
耐电压 Withstanding Voltage	-		
IEC 技术参数 IEC Technical Data			
过电压类别 Overvoltage Category	III	III	II
污染等级 Contamination Class	3	2	2
额定电压 Rated Voltage [V]	-	-	-
额定电流 Rated Current [A]	-	-	-
额定冲击电压 Impulse withstand voltagea [KV]	-	-	-
导线截面积 Conductor cross section 硬质/柔性导线 Solid/ flexible [mm²]	-		
材 料 Material			
绝缘材料 Insulation Material	聚酯		
阻燃等级 Imflammability	-		
导体材料 Contactor Material	-		
导体表面镀层 Contactive Coating	-		
一般参数 Other Data			
间距 Pitch [mm]	-		
极数 Poles [P]	-		
剥线长度 Stripping Length [mm]	-		
螺丝 Screw/扭矩 Torque(Max) [N.m]	-		
工作温度 Operating temperatur [°C]	-25°C～ +60°C		
引针尺寸 Pin Dimensions [mm]	-		
PCB板孔径 PCB Hole Diameter [mm]	-		

DES.	FGG	DATE	25.05.12	单位 / UNITS	mm	尺寸 / SIZE	A4	比例 / SCALE	1:1
CHK.	CLF	DATE	25.05.12	KEFA® 慈溪市科发电子有限公司 CIXI KEFA ELECTRONICS CO., LTD				第三视角/THIRD ANGLE PROJECTION	版本 / REV A
APP.	CLF	DATE	25.05.12					名称 / TITLE	KFMZ862-IO控制壳体印字